hecht® 624

made for garden

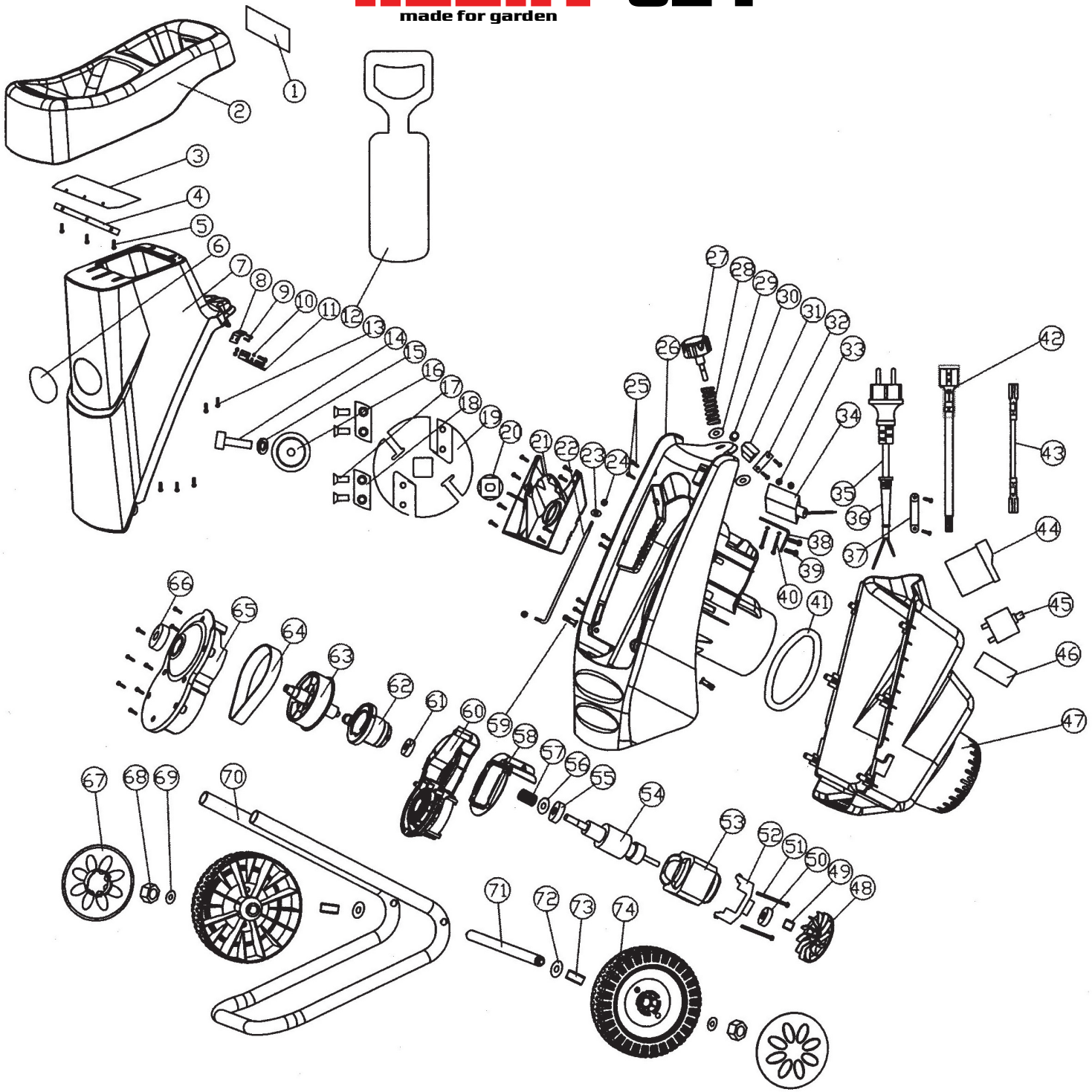

HECHT® 624

made for garden

	OBJ. ČÍSLO	NÁZEV
1	H62401	warning sticker
2	H62402	feeder hopper
3	H62403	scraps defend block
4	H62404	clamp bar
5	H62405	screw
6	H62406	logo
7	H62407	up housing
8	H62408	bolt frame plate
9	H62409	screw
10	H62410	spring washer
11	H62411	switch pin
12	H62412	push stick
13	H62413	„H“ type screw
14	H62414	screw
15	H62415	spring washer
16	H62416	clamp block
17	H62417	screw
18	H62418	blade
19	H62419	blade plate
20	H62420	drive block
21	H62421	blade defend block
22	H62422	pull bar
23	H62423	washer 3
24	H62424	nut
25	H62425	screw
26	H62426	down housing
27	H62427	knob
28	H62428	spring
29	H62429	washer 1
30	H62430	retaining ring
31	H62431	fixup nut

	OBJ. ČÍSLO	NÁZEV
32	H62432	nut frame plate
33	H62433	hex nut
34	H62434	switch
35	H62435	power cord
36	H62436	cord sheath
37	H62437	cord clamp plate
38	H62438	switch frame plate
39	H62439	screw
40	H62440	screw
41	H62441	sponge
42	H62442	connecting wire 1
43	H62443	connecting wire 2
44	H62444	electonmagnetic switch
45	H62445	overload switch
46	H62446	data sticker
47	H62447	motor cover
48	H62448	fan
49	H62449	shaft sheath
50	H62450	bearing
51	H62451	screw
52	H62452	motor support
53	H62453	field
54	H62454	amature
55	H62455	bearing
56	H62456	washer 4
57	H62457	small belt wheel
58	H62458	wind defend board
59	H62459	plastic pin
60	H62460	down cover of gear box
61	H62461	bearing
62	H62462	eccentric wheel

	OBJ. ČÍSLO	NÁZEV
63	H62463	big belt wheel
64	H62464	belt
65	H62465	up cover gear box
66	H62466	bearing
67	H62467	wheel cover
68	H62468	hex nut
69	H62469	washer 1
70	H62470	support tube
71	H62471	connecting pole
72	H62472	washer 2
73	H62473	wheel axel sleeve
74	H62474	wheel